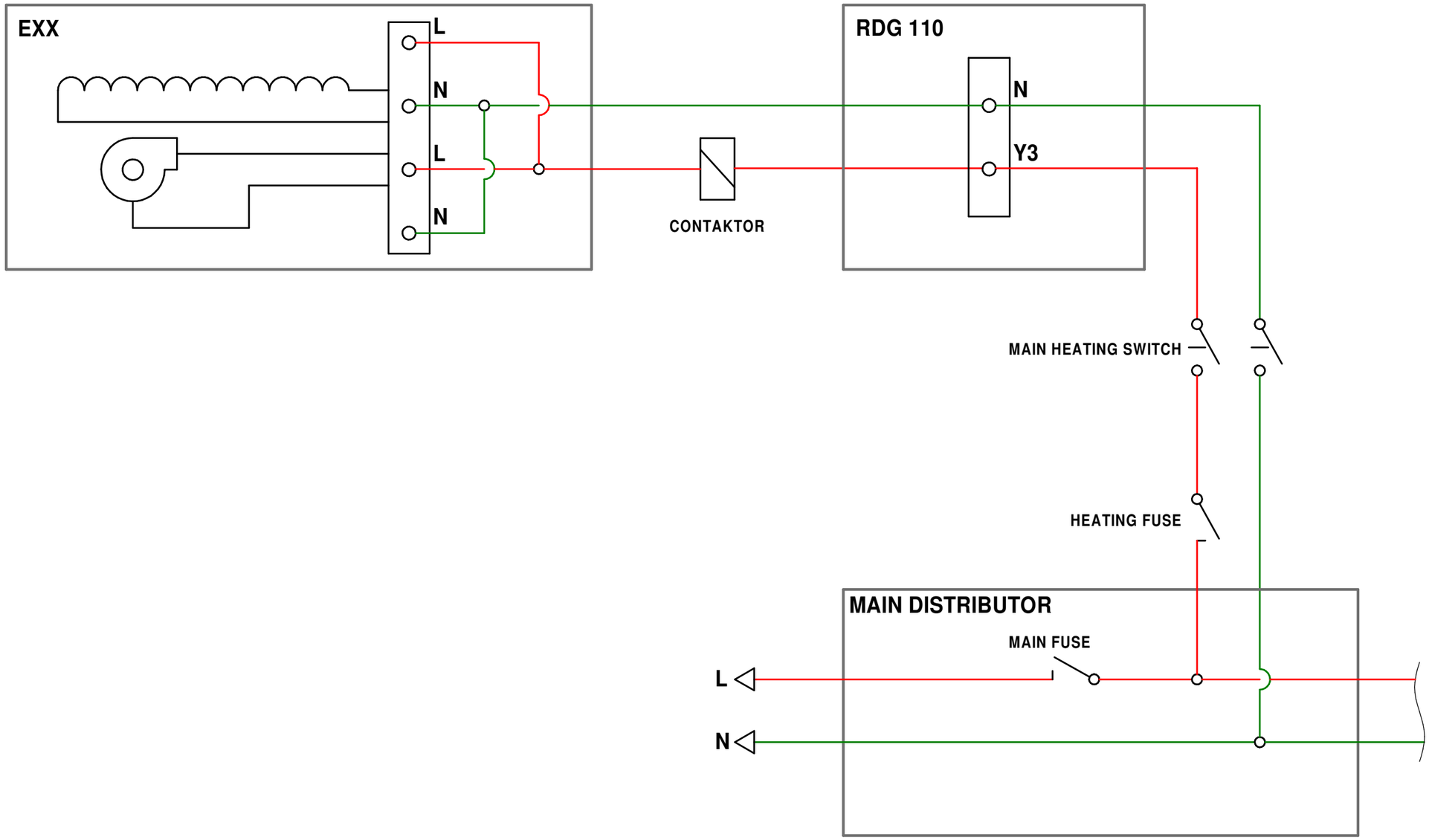

			electrical connection EXX	
				1